Sydney: (02) 9890 9111
Brisbane: (07) 3715 2200
Melbourne: (03) 9212 4422
Perth: (08) 9373 9999

sales@machineryhouse.com.au
www.machineryhouse.com.au

Product Brochure For S994

DB130-3200 - 130mm Die Block Pressbrake Tooling

130mm Square x 3200mm Long
Suits MetalMaster, Amada & European Pressbrakes

Ex GST	Inc GST
$5,950.00	$6,545.00

Order Code:	S994
Model:	Die Block
Type:	DB130-3200
Size (mm):	130 x 3200

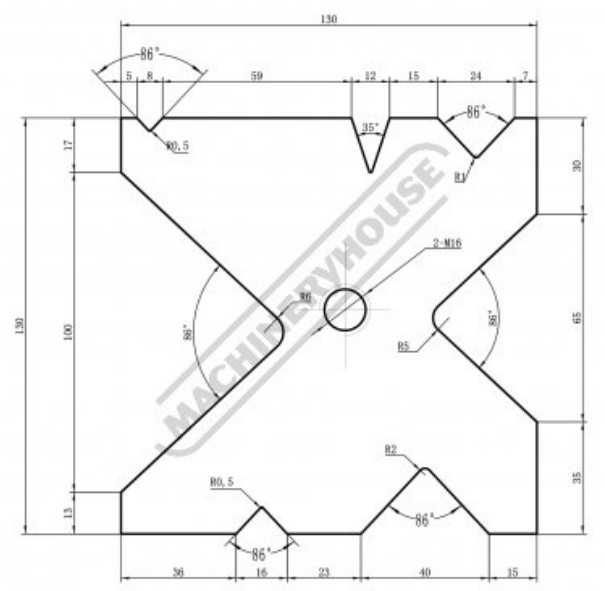

Recommended Accessories

S909G
Hydraulic NC Pressbrake