Sydney: (02) 9890 9111
Brisbane: (07) 3715 2200
Melbourne: (03) 9212 4422
Perth: (08) 9373 9999

sales@machineryhouse.com.au
www.machineryhouse.com.au

Product Brochure For S993A

DB95-4000 - 95mm Die Block Pressbrake Tooling

95mm Square x 4000mm Long
Suits MetalMaster, Amada & European Pressbrakes

Ex GST	Inc GST
$3,950.00	$4,345.00
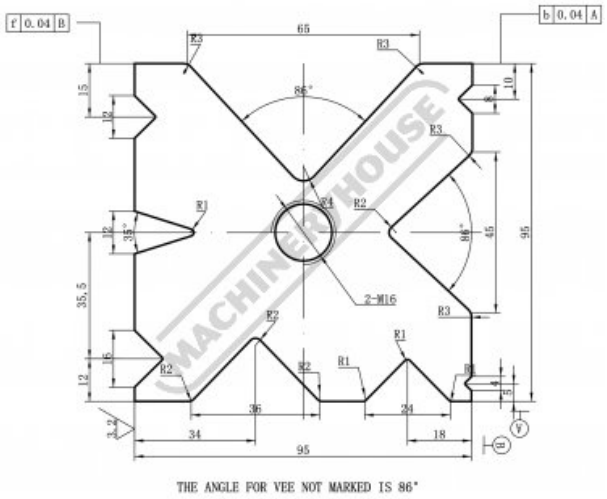
Order Code:	S993A
Model:	DB95-4000
Type:	Die Block
Size (mm):	95 x 4000